Supergrip bolt for rotating flanges



SKF Coupling Systems

Cut down on downtime!

At a time when maintenance cost efficiency in heavy industries is a make-or-break factor in operational economy, the time-saving Supergrip concept can cut costs dramatically.

When you connect your couplings with Supergrip bolts, there is no uncertainty about the length of downtime for removing the bolts. No worry about whether the bolts have jammed or seized in the holes. You know that once the tension and expansion pressure has been released, each bolt will slide out as easily as it went in.

In the marine industry couplings have to be disassembled periodically for surveys. Ships equipped with Supergrip bolts have consistently cut the time to remove and remount propeller shaft coupling bolts.

Steam turbine couplings have to be separated at certain intervals for overhaul, inspection and levelling. A study released by the Swedish State Power Board on the comparison of individually fitted bolts with Supergrip bolts showed a 90-percent reduction in the time required to dis-assemble and reassemble the couplings of two turbo sets (eight couplings).

The unit equipped with Supergrip bolts was reconnected to the power grid 48 hours earlier than the unit with conventional bolts. Total savings was 19,200,000 KWh (48 hours x 400 MW).

The potential savings with Supergrip bolts over the lifetime of a ship or power station are very substantial, when translated into profits.



New technology meets an old challenge

Struggling with conventional bolts
Prior to the introduction of the Supergrip bolt, mounting and dismounting of large rotating flange couplings connected with fitted bolts was a poor economical and technical solution.

Fitted bolts that have to be "mauled" into place with a sledge hammer - after time-consuming honing of the holes and individual grinding of the bolts - can hardly be termed high technology.

Even with the most qualified bolt fitters, it is hard to achieve an interference fit. In most cases, there will be a small gap, and after a certain time in service the clearance may increase, resulting in high bolt stresses and vibrations.

No matter what the application, some time in the future, you will be right back where you started. Each of the bolts will have to be removed. And the job will be further complicated by trying to drive or bore out conventional bolts that have seized in the hole due to fretting, overstressing or too tight to fit.



The Supergrip Bolt offer a better solution for connecting rotating flange couplings. Compared with traditional bolt systems, Supergrip bolts are easier to install and remove, take much less time and hold the coupling halves together much more securely.

The torque in a coupling connected with Supergrip bolts is transmitted in two ways: by the shear strength of the expanded bolt in the hole, and by the friction effect at the flange faces created by pre-loading the bolt. Both effects are controlled and measurable.

Designed specifically for such high-torque applications as propeller shafts, rudder assemblies, turbo generators, rolling mills and similar applications, the Supergrip bolt offers significant advantages:

Simplified machining of the holes and no grinding of the bolts. You eliminate re-reaming and rehoning. The bolts are designed to be inserted and removed with an initial clearance fit. There is no risk of seizure.

Easy to install and remove. Compared with conventional systems, you can drastically cut the time required for installing and replacing bolts.

Expansion and pre-load set to predetermined levels. Coupling slippage is eliminated due to the powerful interference fit and high axial pre-load.

Simplified shaft alignment. Controlled and gradual bolt expansion ensures that concentricity between the flanges is quickly restored.

Fully interchangeable and can be used repeatedly. No need for a set of spare bolts.



Additional savings at the design stage

Due to the uniform torque transmission between the bolts, combined with the friction force created between the flanges, the number and/or diameter of the bolts in the coupling can be reduced, while still retaining a good safety margin.

By reducing the bolt diameter, the flange diameter can also be reduced, resulting in more compact and less expensive coupling flanges.

Tools

A simple tool set, consisting of a hydraulic tensioner with accessories and a hand pump (or air driven pump) with a flexible hose and a quick- disconnect coupling, is supplied with the bolts. The tools are manually operated and hand portable.

How Supergrip works



The bolt is threaded at both ends and has a tapered shank. An expansion sleeve with a corresponding tapered bore fits over the shank. Two nuts complete the unit.

The outside of the sleeve is cylindrical and dimensioned for an initial clearance fit in the bolt hole corresponding to 0.05 to 0.15 % of the bolt hole diameter. There is no high surface finish requirement in the hole. Normal boring is sufficient.

The bolt is inserted into the hole by hand. The sleeve is expanded to a radial interference fit by drawing the tapered shank into the tapered bore of the sleeve. The bolt is then hydraulically tensioned against one nut while the other nut is hand tightened. A pre-load is exerted on the bolt by releasing the pressure on the tensioner.

Pre-loading will cause a slight reduction in the bolt diameter. However, this contraction has already been offset by the expansion of the sleeve.

Sleeve expansion and tensioning of the bolt are carefully controlled by using the hydraulic tensioner included in the tool set.

For removal, the bolt is released from the sleeve by injecting oil between the mating tapered surfaces. The oil is fed through a connection in the center of the bolt.

The working pressure of the hydraulic tensioner is 150 MPa (21.300 psi). A pressure gauge on the pumps permits accurate control of the expansion and tensioning forces.

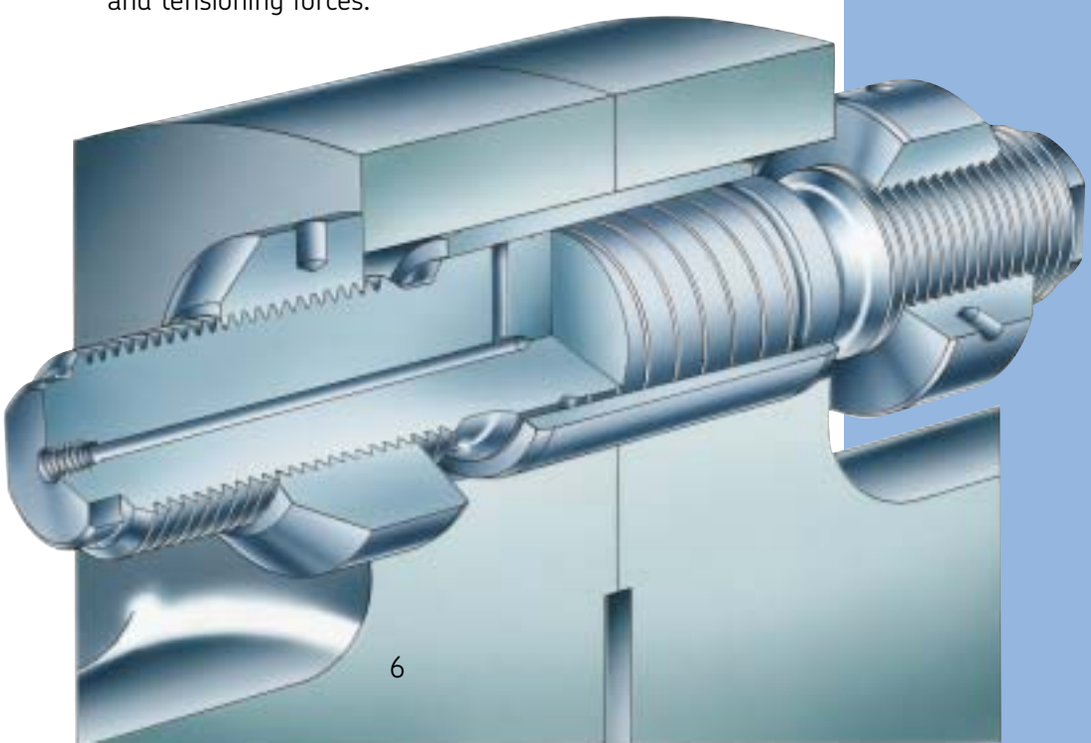

The complete Supergrip bolt program

The Compact Supergrip Bolt - OKBC
Compact Supergrip bolts are designed with flush bolt ends to save space. Flush ends are normally a requirement for connecting steam turbine couplings to reduce windage and noise levels.

Supergrip bolts can be used with straight- or counter-bored flanges.

When a close weight tolerance of the coupling is required for shaft balancing, the bolts can be delivered to meet weight specifications.



The Compact Supergrip Bolt

Supergrip Combination System - OKBS & OKBT
When mounting Supergrip bolts in couplings with a set number and diameter of the bolts, such as crankshaft and gearbox flanges, or when retrofitting existing couplings, the number of bolts can often be reduced, while still ensuring a rigid fit for transmitting the torque.

However, in order to guarantee a symmetrical load distribution, the minimum number of bolts in a coupling should not be less than six. To fulfill this requirement, we have developed a system in which the Supergrip bolts are combined with free-fitting tie bolts.

The tie bolts are tensioned and preloaded in the same way, and with the same tensioner, as the Supergrip bolts.

This combination system is particularly advantageous when bending and axial thrust are high in relation to torque. The free-fitting tie bolt requires less machining and the total cost per coupling is reduced.



Supergrip Combination System

Supergrip Dowel Pin - OKBD
For connecting a flange to a hub with blind holes, we have developed a special Supergrip system, featuring a unique dowel pin combined with hydraulically tensioned tie bolts.

Applications include built-up of electrical rotors, flange-mounted propellers, bolt-on propeller blades and exciter couplings. The dowel pin can also be used to firmly position machinery and to plug drain pipes or holes in pressure vessels.

The dowel pin is also an excellent solution to plugging holes in nuclear power reactor vessels. Supergrip dowel pins have already been proven in a reactor vessel during modification programs when the piping connected to the reactor vessel had to be removed. Supergrip pins plugged the holes from the inside of the vessel in an active environment, at a depth of nine meters. Installation was easy and the plugging action was secure.



Supergrip Dowel Pin

Fitting the Supergrip bolt



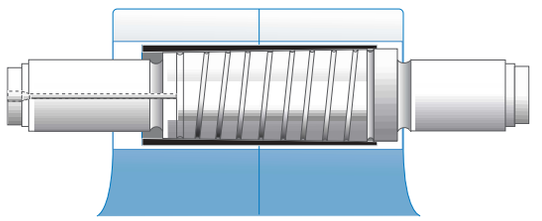

1

Since the bolt is initially smaller than the hole, it is easily inserted by hand.



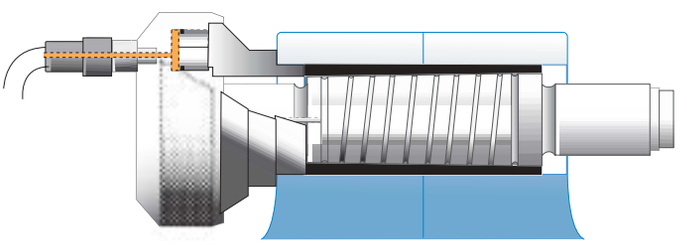

2

The tapered shank is drawn into the sleeve by the hydraulic tensioner, creating a controlled radial interference fit.



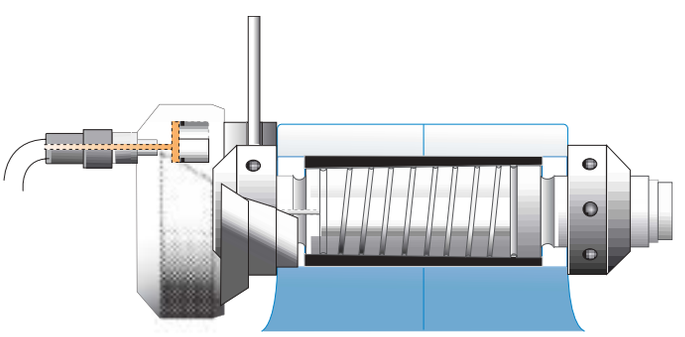

3

After mounting the nuts, the bolt is hydraulically tensioned to a high axial pre-load.



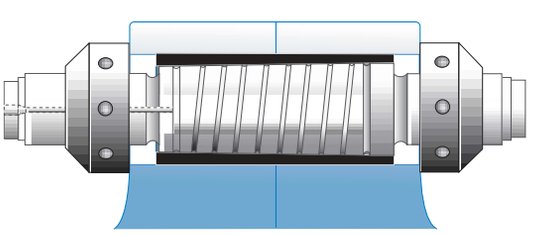

4

After disconnecting the pump and tensioner, the bolt is ready to transmit high torque.

Removing the Supergrip bolt

5

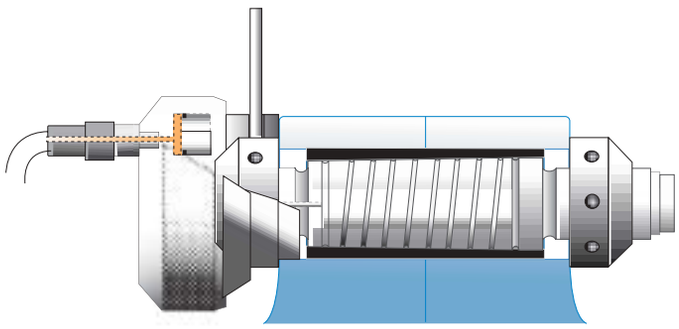

The hydraulic tensioner is connected and pressurized and one nut is released.



6

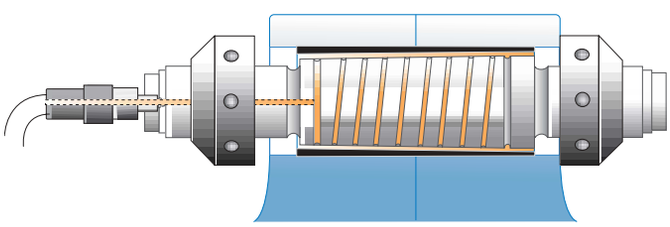

The hydraulic pump is connected to the center of the bolt. Oil is injected to release the bolt from the sleeve. The bolt slides out of the taper and the sleeve immediately regains its original diameter.



7

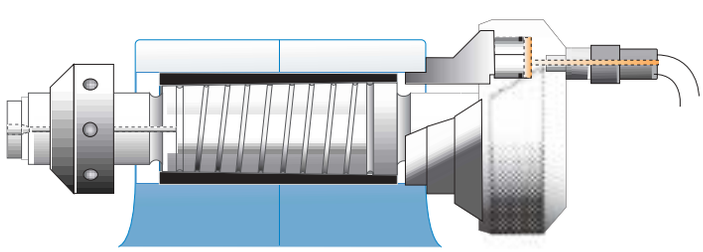

As an alternative, the bolt can be pulled out from the sleeve with the tensioner mounted on the opposite side.



8

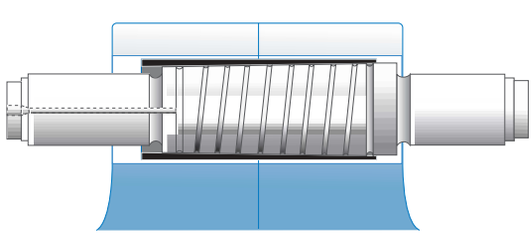

After unscrewing the nuts, the bolt and sleeve can be easily withdrawn by hand.



Design and size recommendations



Sizing us up

The aim in designing the flange coupling is to optimize the number and size of the bolts for the flange coupling as well as the dimensions of the flanges.

The number of bolts in a coupling should not be less than six.

The Supergrip bolt is designed for a maximum shear stress of 280 N/mm^2 and a maximum axial stress of 350 N/mm^2.

Definitions

T_N	Nm	Nominal torque
T_D	Nm	Design torque
T_S	Nm	Torque transmitted by Supergrip bolts
T_T	Nm	Torque transmitted by tie bolts
n_1		Number of Supergrip bolts
n_2		Number of tie bolts
S		Shock factor
K_1	N	Max shear force
K_2	N	Tensioning force on the Supergrip bolts (from Table 1)
K_3	N	Tensioning force on the tie bolts (from Table 1)
a		Flange material factor (from Diagram 1)
b_1		Factor for remaining prestress in Supergrip bolts = 0.7
b_2		Factor for remaining prestress in tie bolts = 0.8

Geometrical dimensions

E	mm	Pitch circle diameter
d_1	mm	Nominal hole diameter Supergrip bolt
d_2	mm	Nominal hole diameter Tie bolt
d_3	mm	Shaft diameter
G	mm	Bolt thread
D_1	mm	Outer diameter of the flange
D_D	mm	Outer diameter of the hydraulic tensioner
B_1	mm	Long threaded bolt end Supergrip bolt
B_2	mm	Short threaded bolt end Supergrip bolt
B_3	mm	Short threaded bolt end Tie bolt
C_{min}	mm	Min thickness of both flanges together
D_M	mm	Nut diameter
F	mm	Nut thickness
R_{min}	mm	Min radius for use of standard tool design
H_1	mm	Min space to operate tensioner

Design torque

The design torque is determined in accordance with

$T_D = T_N \cdot S$ (Nm) [1]

The shock factor S can be selected from the table below.

Shock factor S

Type of power source	Type of load on the driven machine		
	Uniform load Centrifugal pumps Fans Light conveyors Turbo compressors Agitators	**Moderate shock loads** Piston compressors Small piston pumps Cutting tool machines Packeting machines Wood working machines	**Heavy shock loads** Excenter presses Draw benches Plane machines Large piston compressors
	Group 1	Group 2	Group 3
Electric motor, turbine	2.0 – 2.25	2.25 – 2.5	2.5 – 2.75
Multiple cylinder piston engine	2.25 – 2.5	2.5 – 2.75	2.75 – 3.0
Single cylinder piston engine	2.75 – 3.0	3.0 – 3.25	3.25 – 4.0

When the bolt is intended for marine applications the shock factor has to be approved by the Classification Society involved.

Number of Supergrip bolts

Start with assuming a bolt size, then determine the pitch circle diameter E as follows

$E = d_3 + D_D + 10$ (mm) [2]

Calculate max shear force per bolt for the selected bolt size

$$K_1 = 280 \frac{\pi \cdot d_1^2}{4} \cdot a \quad \text{(N)} \qquad [3]$$

The number of Supergrip bolts is then determined from

$$n_1 = \frac{T_D \cdot 2}{E(K_1 + K_2 \cdot b_1 \cdot 0.15)} \; 10^3 \qquad [4]$$

If the number of Supergrip bolts is less than six, select a smaller bolt size and repeat the calculation.

Outer diameter of the flange

The outer diameter of the flange is determined from

$D_1 = E + 1.6 \cdot d_1$ [5]

Combination system

In case the Supergrip combination system is used, for instance at retrofitting, the number of Supergrip bolts and tie bolts are selected as follows.

The design torque is determined in accordance with formula [1]

Select a Supergrip bolt size and determine the pitch circle diameter in accordance with formula [2]

The number of tie bolts should be a multiple of the number of Supergrip bolts (1, 2, 3....).

Select a suitable number of Supergrip bolts n_1 not less than three.

Calculate the torque transmitted by the Supergrip bolts

$$T_S = n_1 \frac{E}{2} 10^{-3} [K_1 + K_2 \cdot b_1 \cdot 0.15] \text{ (Nm)} \quad [6]$$

Determine the torque needed to be transmitted by the tie bolts from

$$T_T = T_D - T_S \text{ (Nm)} \quad [7]$$

The number of tie bolts n_2 is then calculated from

$$n_2 = \frac{T_T \cdot 2 = 103}{K_3 \cdot b_2 \cdot E \cdot 0.15} 10^3 \quad [8]$$

Flange material factor a

Due to the contact stress in the flange when the coupling is in service, the flange material must be considered.

Diagram 1

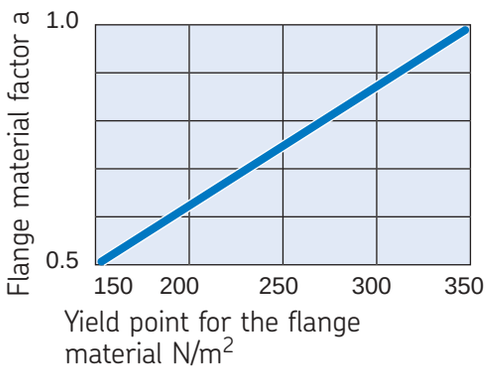

Table 1

Bolt dia (mm) over	to	Thread	$K_2 x 10^3$(N)	$K_3 x 10^3$(N)	D_D
40	44	M33	302	388	88
44	49	M36	352	453	102
49	51	M39	427	549	102
51	55	M42	488	628	118
55	58	M45	573	737	118
58	62	M48	647	831	136
62	68	M52	779	1001	136
68	73	M56	898	1154	156
73	78	M60	1053	1353	156
78	83	M64	1194	1536	178
83	88	M68	1372	1764	178
88	93	M72	1562	2008	198
93	98	M76	1764	2268	198
98	104	M80	1978	2544	236
104	112	M85	2264	2910	236
112	118	M90	2569	3303	268
118	124	M95	2893	3719	268
124	130	M100	3236	4160	296
130	138	M105	3599	4627	296

Material specification

Bolt shank, sleeve and nuts:

Grade SS 2541 equivalent to	B.S. 817M40 DIN 34NiCrMo6 SAE 4337
Mechanical properties	R_{eL} = 700 N/mm^2 A_5 = min 12%

Conversion table

1 N = 0.102 kp = 0.225 lb
1 Nm = 0.102 kpm = 0.738 lb x f t
1 MPa = 10.2 kp/cm^2 = 0.145 x 10^3 lb/in^2
1 N/mm^2 = 0.102 kp/mm^2 = 0.145 x 10^{3}lb/in^2
1 m = 39.37 in
1 mm = 0.03937 in
1 in = 25.4 mm
0°C = 273.15 K = 32°F

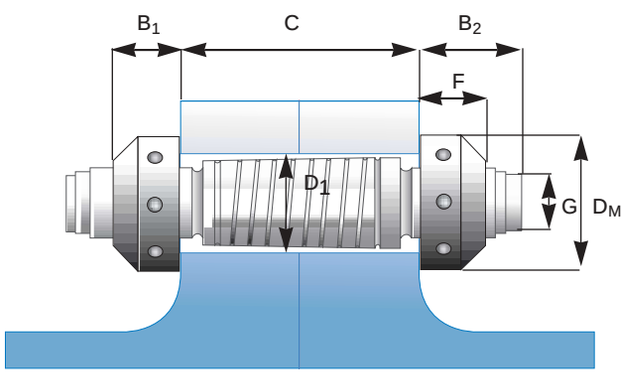

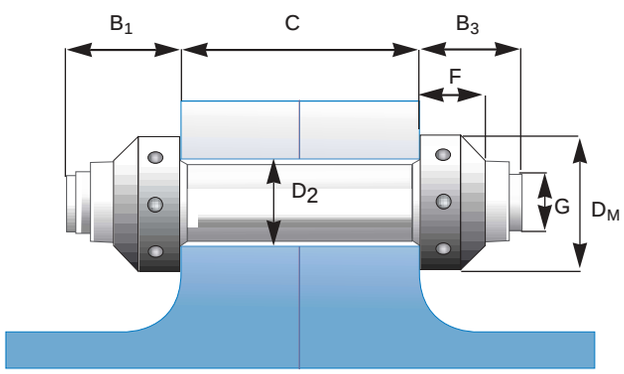

Dimensions

Supergrip Bolt									Tie Bolt				Mounting Tools	
Nom. hole diameter $d_1$mm	Thread G	Min. thickness of both flanges C_{min} mm	Long threaded bolt end B_1 mm	Short threaded bolt end B_2 mm	Nut thickness F mm	Nut diameter D_M mm	Total weight Compl. bolt Kg	Addition for every 10 mm >C_{min}	Nom. hole diameter d_2 + 0.1 mm	Short threaded boil end B_3 mm	Total Weight Compl. bolt Kg	Addition for every 10 mm >C_{min}	Outer diam. of hydraulic tensioner D_D mm	Min. space to operate tensioner H_1 mm
40 - (44)	M33x3.5	126	64	51	27	58	2.5-2.7	0.05	34	35	1.9	0.05	88	142
44 - (49)	M36x4	140	70	56	29	63	3.3-3.6	0.06	37	37	2.5	0.06	102	149
49 - (51)	M39x4	143	78	62	31	67	4.1-4.2	0.07	40	41	3.5	0.07	102	157
51 - (55)	M42x4.5	155	83	66	34	72	5.0-5.3	0.08	43	44	4.3	0.08	118	157
55 - (58)	M45x4.5	160	87	69	36	76	6.0-6.2	0.09	46	46	5.2	0.09	118	161
58 - (62)	M48x5	172	91	72	39	81	7.3-7.6	0.10	49	49	6.3	0.10	136	177
62 - (68)	M52x5	185	99	78	42	89	9.2-9.8	0.13	53	52	8.0	0.13	136	185
68 - (73)	M56x5.5	199	106	83	45	96	11.5-12.2	0.14	57	55	10.0	0.14	156	198
73 - (78)	M60x5.5	209	114	90	48	102	14.1-14.8	0.17	61	60	12.2	0.17	156	206
78 - (83)	M64x6	222	122	96	52	109	17.2-18.1	0.19	65	64	14.9	0.19	178	231
83 - (88)	M68x6	233	128	101	55	116	20.4-21.3	0.22	69	67	17.7	0.22	178	237
88 - (93)	M72x6	243	134	105	58	122	24.0-25.0	0.25	73	70	21.0	0.25	198	245
93 -(98)	M76x6	254	140	110	61	130	28.3-29.5	0.28	77	73	24.5	0.28	198	251
98 - (104)	M80x6	267	146	114	64	137	33.0-34.6	0.32	81	76	28.5	0.32	236	282
104 - (112)	M85x6	284	154	120	68	147	39.9-42.3	0.36	86	80	34.3	0.36	236	290
112 - (118)	M90x6	297	162	126	72	155	47.5-49.5	0.41	91	84	40.6	0.41	268	310
118 - (124)	M95x6	309	170	132	76	164	55.6-57.9	0.46	96	88	47.4	0.46	268	318
124 - (130)	M100x6	321	178	138	80	172	64.2-66.6	0.52	101	92	55.1	0.52	296	334
130 - (138)	M105x6	339	186	144	84	182	74.6-78.3	0.58	106	96	64.0	0.58	296	342

Our track record in torque transmission

Since the 1940s, more than 35000 SKF OK and OKF oil-injection shaft couplings have been delivered to owners and operators in the marine, steel and power industries for high-torque transmission applications.

The innovative OK coupling, which only requires a cylindrical shaft, is based on the principle of transmitting torque by applying a powerful interference fit, instead of using shaft-weakening keyways. And with the SKF Oil Injection Method, mounting and dismounting of these couplings takes only a fraction of the time required with the conventional devices.

The same advanced design has now been applied to the coupling bolt. The Supergrip bolts represent a "quantum leap" in improving the technology of connecting rotating flange couplings. They are already on the job - on land and at sea - delivering performance that supports the claim that they are better than any other coupling bolt available on the market.



SKF Supergrip bolts have been installed on rotating flange couplings in a wide range of marine and power applications worldwide. The Supergrip bolt has been approved for use by all leading international and national classification societies and regulatory bodies.

Ringhals 1 Nuclear Power Station. When overhauling two turbosets 152 bolts were replaced in 80 hours with SKF Supergrip bolts. Total time gained in power production 48 hours.





Bermuda East Power Station, installation in a slow running diesel generator power plant.



Mounting OKBS 95 x 250 on the thrust shaft/intermediate shaft flange coupling in Jubilee.



Carnival Cruise Line's Jubilee and sister ship, built at Kockums Shipyard in Sweden. Total of Supergrip bolts for Jubilee: 72.

SKF Coupling Systems AB was established in the early 1940s when SKF's Chief Designer, Erland Bratt, invented the SKF Oil-Injection Method. As the result of continuous development, SKF is currently a world leader in selected market niches.

Our business concept is to develop, produce and supply products based on the SKF oil-Injection method. These products significantly reduce downtime and lower maintenance costs on the capital-intensive equipment in which they are used.



SKF Coupling Systems AB

SE-813 82 Hofors, Sweden.
Tel: +46 290 250 00. Fax:+46 290 282 70
E-mail: skf.coupling.systems@skf.com
Home page: www.couplings.skf.com

SKF